RIO
REDFERN INTEGRATED OPTICS

LIGHT THAT MAKES PERFECT SENSE™

1064 nm RIO PLANEX™ External Cavity Laser

A high performance narrow linewidth single frequency laser capable for OEM applications suitable for volume production

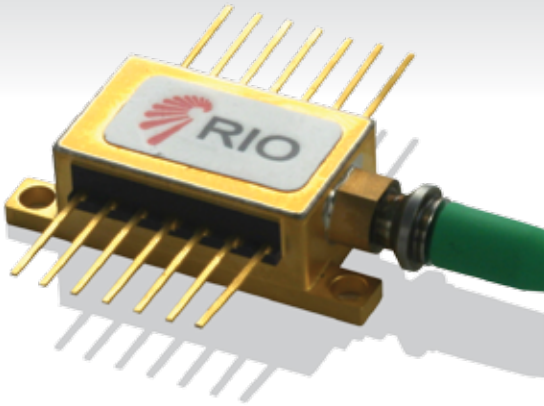

The 1064 nm PLANEX™ laser product is high performance and industry-proven single frequency External Cavity Lasers (ECL) based on RIO's proprietary planar technology - PLANEX™. The PLANEX laser consists of a gain chip and a planar lightwave circuit (PLC) that includes a Bragg grating. The coupling of these components forms a cavity with significant benefits: with up to 20mW output power, very low RIN, low phase noise and narrow linewidth, and very low wavelength sensitivity to bias current and temperature.

The 1064 nm PLANEX's industry-standard footprint 14-pin butterly package, mounting pattern and electrical connections make it an easy drop-in replacement for existing designs. RIO's PLANEX lasers are the next generation of optical solutions – combining the high performance of long cavity fiber lasers with the low cost, simplicity and Telcordia GR-468 reliability qualified technology platform semiconductor lasers.

The 1064 nm PLANEX's higher output power, low noise and narrow linewidth ideally position this semiconductor optical solution for multiple applications where absolute accuracy, lifetime reliability over demanding field conditions, and high resolution are vital, such as seeding of fiber and solid state lasers, Second harmonic Generation (SHG), Optical Parametric Oscillators (OPO), laser spectroscopy, LIDAR and other precision metrology applications.

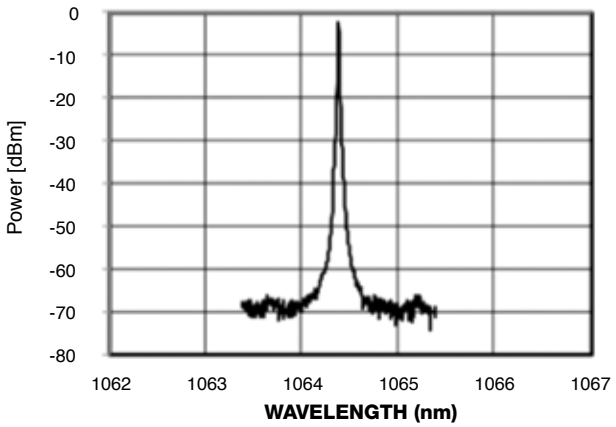

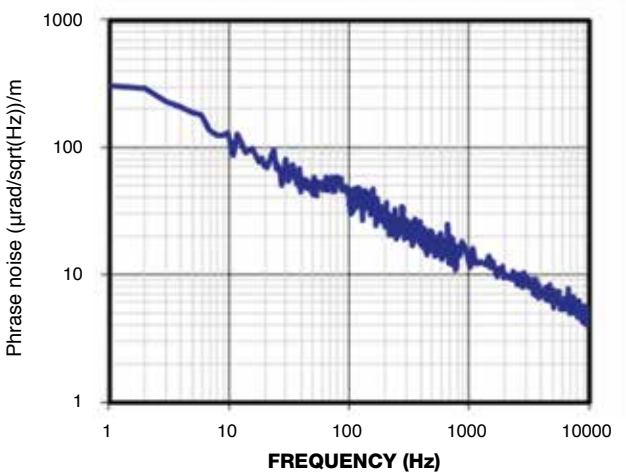

KEY FEATURES

- Single longitudinal mode
- Center wavelength: 1064 nm
- Narrow linewidth, long coherence length
- Low phase noise
- Wavelength tunability
- Excellent SMSR
- Excellent wavelength stability over life and temperature
- Small form factor, 14 pin butterfly
- Low power dissipation
- SMF and PM fiber pigtail options
- RoHS compliant

For ordering or technical information contact
REDFERN INTEGRATED OPTICS
3350 Scott Blvd Bldg 1 | Santa Clara CA 95054 | USA

P 408 970 3500 x 310
F 408 970 3200
sales@rio-lasers.com

RIO

Performance Highlights

PARAMETER	MIN	MAX	UNIT
Output Power	10		mW
Center Wavelength	1062	1066	nm
Thermal wavelength tuning range	20		pm
Linewith		15	kHz
Side Mode Suppression Ratio	50		dB
RIN		-135, typ.	dB/Hz
Laser Bias Current		140	mA
Polarization Extinction Ratio	17		dB
Optical Isolation	23		dB
Operating temperature range	5	50	°C

Pin-Out

Contact #	Description	Contact #	Description
1	Thermistor	8	Not connected
2	Thermistor	9	Package
3	Laser cathode DC (-)	10	Package
4	PD Anode (-)	11	Laser Anode (+)
5	PD Cathode (+)	12	Cathode (-)
6	TEC +	13	Laser Anode (+)
7	TEC -	14	Package

Mechanical Diagram

Units: mm

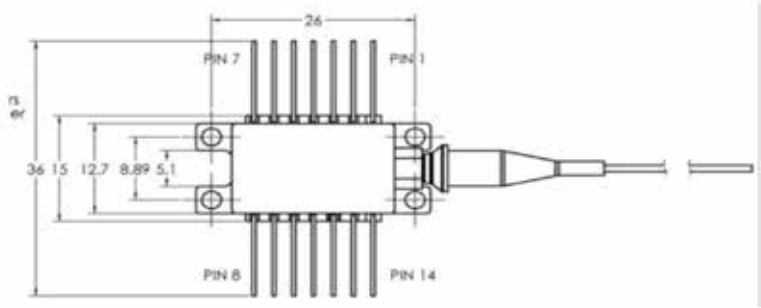

Ordering Information

R I O 0 1 9 X - X - X X - 1

Fiber/Connector	
4	SMF/FC-APC
5	PMF/FC-APC

Output Power (min.)	
3	10 mW
5	20 mW

Phase Noise / Linewidth	
1	Grade 1, Linewidth < 15 kHz

Wavelength	
07	1064±3 nm
08	1064±1 nm
09	custom



Laser Safety Information

The 1064 nm ORION RIO PLANEX is classified as FDA/CDRH Class IIIb laser products per CDRH, 21 CFR 1040 laser safety requirements.

APPLICATIONS

- Seeding of fiber and solid state lasers
- Second Harmonic Generation (SHG)
- Optical Parametric Oscillators (OPOs)
- Laser spectroscopy
- LIDAR
- Metrology

Oil & Gas



Wind



Security

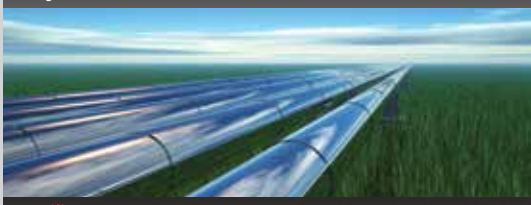

Infrastructure



Metrology



For ordering or technical information contact
REDFERN INTEGRATED OPTICS
3350 Scott Blvd Bldg 1 | Santa Clara CA 95054 | USA

P 408 970 3500 x 310
F 408 970 3200
sales@rio-lasers.com

RIO